Notes on creating the final report

Contents

1. Introduction to the Template 3
1.1. Completion of the Title Page 3
2. Production of the Report 3
2.1. Formatting of the Report 3
2.1.1. Styles 4
2.1.2. Equations and Figures (including graphs, circuit diagrams, pictures etc.) 5
2.2. Advice on Quoting and the Avoidance of Academic Malpractice 6
2.2.1. Referencing 6
3. References 6
4. Appendices 7
4.1. Appendix 1 7
4.2. Appendix 2 – etc. 7

1. Introduction to the Template

Please read the following very carefully before writing your third-year individual project Final Report. You should also refer to appropriate sections in the Project Handbook for further information on what to include in the reports.

1.1. Completion of the Title Page

This is the template for Third Year Individual Project Final Report. Type your Third Year Individual Final Report into this document and then save it as yours with a new filename. The title page of the report MUST be laid out as shown and with the same formatting.

- Replace the words, "Project Title" with your project's title, which can be more than one line. Make sure the date is correct for the report being submitted.
- Replace the words, "Your Name" with your actual name, beginning with your first (or given) name and ending with your last (or family) name.
- Replace the words, "Your Identification Number" with the identification (or registration) number to be found on your Student Card. Use only the first seven digits of this number do not include the eighth digit if one is shown.
- Finally on the title page, put the name of your project supervisor after the word, "Supervisor: ", for Example, Supervisor: Dr Sareh Malekpour.

2. Production of the Report

The Final Report must be word-processed in preparation for electronic submission through Blackboard. Reports submitted after the deadline will receive zero marks unless there are mitigating circumstances, which must be made known to the Welfare Officer or the Director of Studies BEFORE the deadline.

Please note the following points from [1], "The main body of the project report including text, diagrams and any other material must not exceed 35 numbered A4 pages (excluding abstract, list of contents/figures, glossary, references and any appendices)." [1]

Formatting of the Report

For the format of the Report, you must refer to the Project Handbook

2.1.1. Styles

The Styles menu in this document can be used to add numbered sections and sub-sections to the report using ‘Heading 1’, ‘Heading 2’ and ‘Heading 3’. The main body text is based on the ‘Normal’ style.

The contents page links to the headings and can be updated to give the correct sections and page numbers.

Note: The School cannot provide support in the use of Word.

2.1.2. Equations and Figures (including graphs, circuit diagrams, pictures etc.)

Number all equations and explain each variable as follows. The area of a circle, *A*, is given by

$$A = \pi r^2 \tag{1}$$

where *r* is radius of the circle. The velocity, *v*, of a uniformly accelerated motion is given by

$$v^2 = u^2 + 2as \tag{2}$$

where *u* is the initial velocity, *a* is the acceleration and *s* is the distance travelled. Newton's second law can be formally stated as

$$F = ma \tag{3}$$

where *F* is the force, *m* is the mass and *a* is the acceleration.

Familiar symbols such as π are usually assumed and do not need explanation.

You should refer to figures in your main text and label each figure with a caption; for example, Figure 1 shows a single transistor common-emitter amplifier.

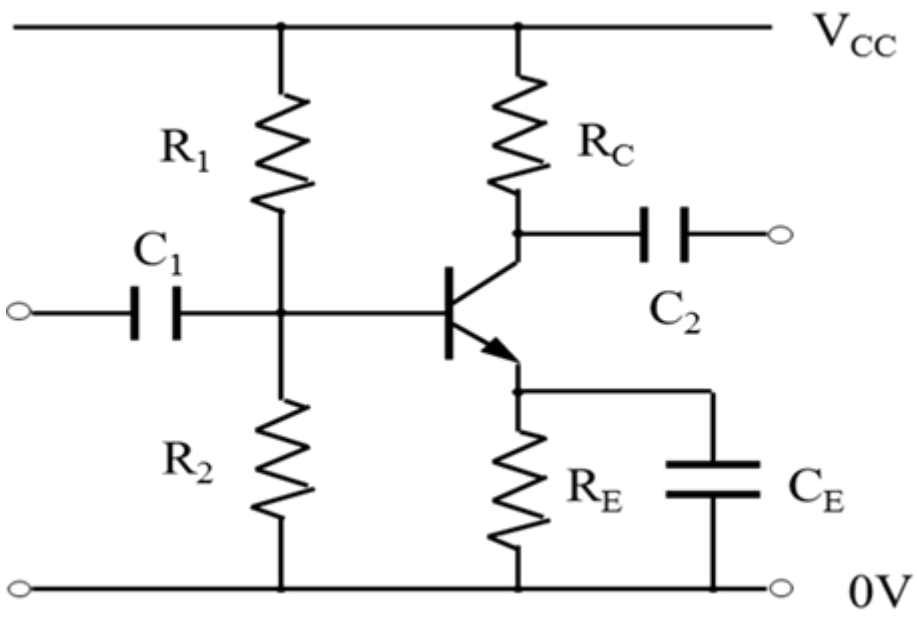

Figure 1. A Single Transistor Common-Emitter Amplifier.

2.2. Advice on Quoting and the Avoidance of Academic Malpractice

Before you submit the Final Report, you should have completed the requirements related to academic malpractice as detailed in section 4 of the Project Handbook.

In general, we would not expect to see a lot of quoted sections in the reports that you produce. This is because if they are quotes then they are from another person, and it is their work and not yours and therefore cannot earn you any marks. Equally if you do not indicate by the use of quotes that sections have been cut and pasted from someone else's work, then you may be guilty of academic malpractice in the form of plagiarism. Academic malpractice is taken very seriously and there are serious consequences when academic malpractice is exposed. For example, if it were discovered in a third-year project report the student may lose their entitlement to a degree. You have been warned!

2.2.1. Referencing

We expect you to read other people's work to find out the current thinking in the particular subject area in which you are working. For a literature review your task is to read the papers, the books, and any other relevant information that you can find in the subject area and then comment on the relevance of others' work to that of your own. From this you will be able to include references to your source material. Do not simply "cut and paste" quotes as this does not form any sort of intellectual discussion, which is what we are looking for to be able to award marks.

Here is an example of referencing in the text, the details of the references appear in the Reference section:

Jones in [2] relies on experimental results to demonstrate that black is actually white, whilst in [3] Naseem produces a logical proof that this is the case.

3. References

[1] Yin, W, Iacchetti, M, "Year 3 Project Handbook", School of Electrical and Electronic Engineering, The University of Manchester, (2018).

[2] Jones, GJ, "Experiments you would not believe", The Unusual Press, Stoke, (2005), pp. 97 - 103.

[3] Naseem, K, "Logical truths", Oxford University Press, Oxford, (2006), pp. 2 - 5.

4. Appendices

4.1. Appendix 1

4.2. Appendix 2 – etc.

Also please read section 8.1, Format of the Final Report, on page 9 of Individual 3rd Department Year Project (EEEN30033) Handbook